Degree of protection: IP67

Hoods, side entry

Thread	Designation	Order No.
M25	W16B-SE-2L/SC-M25	111 116 541 1001
M32	W16B-SE-2L/SC-M32	111 116 541 1002
PG21	W16B-SE-2L/SC-PG21	111 116 541 1003

Please refer to page 15-02 for choosing proper model of lock.

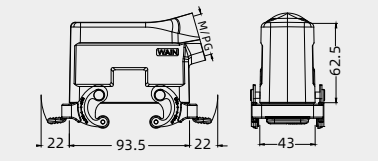

Hoods, side entry, high construction

Thread	Designation	Order No.
M32	W16B-SEH-2L/SC-M32	111 116 541 5001
M40	W16B-SEH-2L/SC-M40	111 116 541 5002
PG21	W16B-SEH-2L/SC-PG21	111 116 541 5003
PG29	W16B-SEH-2L/SC-PG29 with sleeve	111 116 541 5004
M32	W16B-SEH-2L/SC-M32 WS	111 116 541 5005
PG21	W16B-SEH-2L/SC-PG21 WS	111 116 541 5011
PG29	W16B-SEH-2L/SC-PG29 WS	111 116 541 5006

Please refer to page 15-02 for choosing proper model of lock.

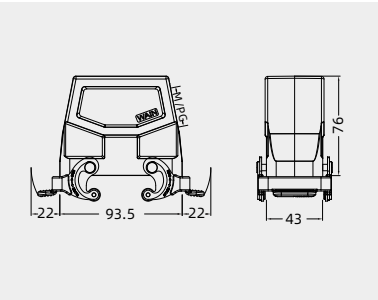

Hoods, top entry

Thread	Designation	Order No.
M25	W16B-TE-2L/SC-M25	111 116 441 1001
M32	W16B-TE-2L/SC-M32	111 116 441 1002
PG21	W16B-TE-2L/SC-PG21	111 116 441 1003

Please refer to page 15-02 for choosing proper model of lock.

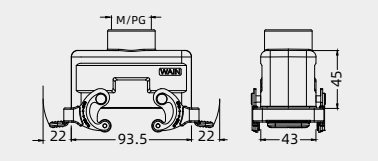

Hoods, top entry, high construction

Thread	Designation	Order No.
M32	W16B-TEH-2L/SC-M32	111 116 441 5001
M40	W16B-TEH-2L/SC-M40	111 116 441 5002
PG21	W16B-TEH-2L/SC-PG21	111 116 441 5003
PG29	W16B-TEH-2L/SC-PG29 with sleeve	111 116 441 5004
M32	W16B-TEH-2L/SC-M32 WS	111 116 441 5009
PG21	W16B-TEH-2L/SC-PG21 WS	111 116 441 5011
PG29	W16B-TEH-2L/SC-PG29 WS	111 116 441 5012

Please refer to page 15-02 for choosing proper model of lock.

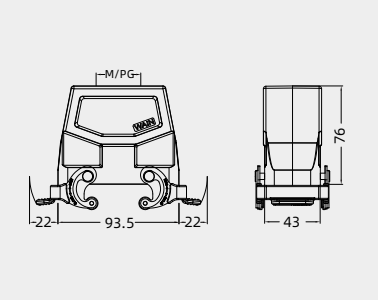

Bulkhead mounted housings
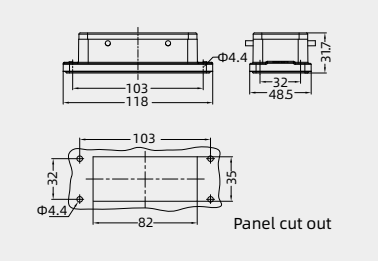
Thread	Designation	Order No.
---	W16B-BK-4B	111 116 330 1001